博雷控制
BOLLEY Control

博雷(天津)控制系统制造有限公司
BOLLEY(TIANJIN) CONTROL SYSTEM MANUFACTURING CO., LTD.

BOL SERIES ELECTRIC ACTUATORS

BOL 系列电动执行器

COMPANY PROFILE

公司简介

博雷（天津）控制系统制造有限公司是一家集工程、阀门生产于一体的企业，引进美国先进阀门制造技术，为客户提供专业的过程自动化及控制设备等解决方案。一直以来稳步发展，经过多年的积累，博雷控制已经迈入了国际化公司的行列。

公司主导产品有闸阀、截止阀、蝶阀、球阀、止回阀、调节阀、减压阀、隔膜阀、旋塞阀、柱塞阀、疏水阀、电站阀、美标阀、水力控制阀等80多种品种、300多个系列、几千种规格。产品采用GB、JB、HG、API、ANSI、DIN、JIS、BS等国内外先进标准设计制造。通径从1/4＂至96＂（DN6-2400mm）、压力从150LB至2500LB（2MPa-42MPa）、工作温度为-196℃至800℃。主要材料有灰铸铁、球墨铸铁、铜、碳素钢、不锈钢、合金钢、低温钢、铬钼钢、沉淀硬化钢及其他特殊钢材。

我们以卓越的品质和服务取得了全球数以万计的用户的信赖及支持，所涉及的行业包括化工、石化、电力、环境、生物科技、燃气、染料、制药、供热、造纸、建筑食品、有色金属、钢铁以及其他工业领域。

我们重视客户提出的每一个要求，并按照客户提出的要求量身定做，力求为客户提供最好的解决方案，同时也能优化产品性能，客户感到满意与他们保持紧密的合作关系。我们坚持这样做并取得了成功，这是我们发展的动力。自从博雷控制诞生的那一刻起，我们力求每一个环节都做到精益求精，所以我们的质保系统渗透到每一个工序，确保每个员工用到的是最好的零配件，这是我们发展的根本。

为了确保产品质量和满足顾客的要求，我们坚持不断深化内部管理，努力提升全员质量意识，扩大全球营销团队，为国内外客户提供更方便快捷的服务。

我们力求每一个环节都做到精益求精，
争做控制系统行业之美好明天的领航者！

Bolley (Tianjin) Control System Manufacturing Co., Ltd. is a collection of engineering control system, valve production in a body's enterprise, introducing the advanced valve manufacturing technology, providing customers with professional solutions for process automation and control equipment, etc. Has been a steady development, after many years of accumulation, Bolley Control has entered the international company.

Company main products are gate valve, globe valve, butterfly valve, ball valve, check valve, regulating valve, relief valve, diaphragm valve, plug valve, plunger valve, steam trap, power station valve, american standard valve, hydraulic control valves, and more than 80 varieties, more than 300 series, thousands of specifications. Product by GB, JB, HG, API, ANSI, DIN, JIS, BS, and domestic and foreign advanced standards. Size from 1/4 "to 96" (DN6–2400mm), pressure from 150LB to 2500LB (2MPa – 42MPa), the working temperature to –196℃ to 800℃. The main materials are gray castiron, nodular cast iron, copper, carbon steel, stainless steel, alloy steel, low temperature steel, chrome molybdenum steel, precipitation hardened steel and other special steel.

With our excellent quality and service has made the world tens of thousands of users trust and support, involved in industries including chemical, petrochemical, electric power, environmental, biological technology, gas, dyestuff, pharmaceutical, heating, papermaking, food, non–ferrous metals, steel and other industrial fields.

We attach importance to the customer request of each, and customized according to customer demand, makes every effort to provide customers with the best solution, but also can optimize product performance, customer satisfaction and their close relations of cooperation. We insist on doing this and has been a success, this is our development power. Since the birth of Bolley control that moment, we strive to do every link strives for perfection, so our quality assurance system to infiltrate every working procedure, to ensure that each employee use is one of the best parts, it is fundamental to our development.

In order to ensure product quality and meet the requirements of customers, we continuously deepen the internal management, efforts to enhance the quality consciousness, expand the global marketing team, to provide more convenient service to customers from home and abroad.

We Strive To Achieve Excellence In Every Aspect,
To Control System Of Industry Leader A Better Tomorrow!

BOL系列

电动执行器

BOL SERIES ELECTRIC ACTUATORS

Http: //www.bolley.cn

BOL 系列电动执行器
BOL SERIES ELECTRIC ACTUATORS

◆ 功能特点 Function Features

● 功能强劲:
智能型、比例型、开关型、各类型号输出;
全行程时间15秒、30秒、60秒等供您选择;
智能型控制模块集成于电动装置本体中，无须外接定位器;

● 可靠性能:
特殊的铜合金锻造一体化蜗轮强度高、耐磨性好、传动精度高;
优质进口轴承、电器元件等关键零部件提高了使用寿命;
通过1500V耐压测试，F级绝缘电机安全可靠;
IP67高标准防护等级;

● 使用方便:
免加油、免点检、防水防锈、任意角度安装;
采用单相电源，外接线路简单，并有AC(24、110、380)V、DC(12、24、220)V供选择;

● 唯美外观:
铝合金压铸外壳，精确流畅;
体积和重量仅相当于传统的35%左右。

● Powerful function:
- Choose Intelligent type, proportion type or switch type to output all kinds of signal;
- The whole stroke time as 15 seconds,30 seconds, 60 seconds, etc are avaibble for your choice;
- Intelligent control modules are integrated in the body of electric devices, no need for installing locator;

● Reliable performance:
- Special copper alloy forging integration worm wheel, intensity height, good abrasion resistance,high transmission accuracy;
- Use high-quality import bearings, electrical components and ather key components to improve the service life;
- Passed 1500V electric strength test ,class F insulation electrical machinery is safe and reliable;
- IP67 high standards protection grade;

● Easy to use;
- Non refueling, non point inspection, waterproof, antil-rust, installed at any angles;
- Use single-phase power supply, the external circuit is simple, and AC(24,110,380)V,DC(12,24,220) V are available for your choice;

● Beautiful appearance:
- Aluminum alloy die casting shell, fine and smooth;
- The size and weight is only about 35% of the traditional one.

控制线路区
Control line area

蜗轮
Worm gear

ISO5211连接盘
ISO5211 Actuator mounting

◆ 技术参数及扭矩 Technical Data and Torque

型号 Model	BOL 05	BOL 10	BOL 15	BOL 25	BOL 50	BOL 100	BOL 200
电源 Power	AC24V、AC110V、AC220V、AC380V、AC400V、DC24V						
力矩 Torque	50N.M	100N.M	150N.M	250N.M	500N.M	1000N.M	2000N.M
行程时间 Stroketime	12/25S	15/30S					50/100S
电机功率 Motor power	15W	25W	35W	45W	90W	110W	110W
保护 Protection	电机过热保护（120℃）Motor overheating protection（120℃）						
转动角度 Angle of rotation	0-90°						
环境温度 Environmental temperature	-10~+60℃						
耐压值 Withstand voltage	1500V						
启动电流 Starting current	0.25A	0.6A	0.68A	0.76A	1.2A	1.36	1.36
工作电流 Working current	0.25A	0.52A	0.55A	0.70A	1.15A	1.28A	1.28A
防护等级 Protection grade	相当于IP67标准 Equivalent of IP67 standard						
限位 Limit	电动时：全开全闭极限开关；手动时：机械挡块 Electric: Fully open to fully closed limit switch; Manual: Mechanical block						
重量 Weight	2.8Kg	4.2Kg	4.5Kg	7.2Kg	7.5Kg	12.5Kg	12.5Kg
输入信号 Input signal	4-20mA 0-10V 1-5V						
输出信号 Output signal	4-20mA 0-10V 1-5V						

电话(Tel): 022-27575088
http://www.bolley.cn

◆ 标准规格 Standard Specification

外壳 Shell	防水级别 Waterproof level IP67,NEMA4 and 6
电机电源 Motor power	标准：220V AC单相 可选：110V AC单相，380/440V AC 三相：50/60Hz，±10%24V DC/110V DC/220V DC Standard:220V AC Single-phase Optional:110V AC Single-phase,380/440V AC Three-Phase,50/60Hz,±10%24V DC/110V DC/220V DC
电机 Motor	鼠笼式异步电机 Squirrel-cage asynchronous motor
限位开关 Limit switch	开/关，各1个 SPDT,250VAC10A Open/close，each 1SPDT,250VAC10A
辅助限位开关 Auxiliary limit switch	开/关，各1个 SPDT,250VAC10A Open/close，each 1SPDT,250VAC10A
行程 Stroke	90° ±10°
失速防护/操作温度 Stall protection/operating temperature	内置过热保护，开115℃±5℃/关97℃±5℃ Inside overheating protection,open115±5℃/close97℃±5℃
指示器 Indicator	连续的位置指示刻度 Continuous position indicating scale
手动操作 Manual operate	机械手柄(可选装手轮）Mechanical handle (Handwheel is optional)
自锁装置 Self-locking device	蜗轮,螺杆机构提供自锁 Provide self-lockingbywormand wormgear
机械限位 Mechanical limit	2个外部调整螺栓 2pieceof external abjustable bolt
接线孔 Conduit entry	2个M18 2 Pieces M18
环境温度 Ambient temperature	-10℃~+60℃
润滑 Lubrication	铝基润滑脂(EP型) Aluminum base grease (EP type)
材料 Material	钢，铝合金，铝青铜，聚碳酸酯 Steel，aluminum alloy，aluminum bronze，polycarbonate
环境湿度 Ambient humidity	最大90% RH Max 90%RH 非凝结 Non condensation
搞震性能 Anti-vibration performance	XYZ10g,0.2~34Hz,30分钟 XYZ10g，0.2~34Hz，30 Minutes
外涂层 External coating	干粉，环氧聚酯 Dry powder,epoxy polyester

◆ 可选规格 Optional Specifications

编号No.	可选配置 Optional configuration	备注 Remarks
1	加热器 Heater	除BOL-03外 Except BOL-03 BOL系列 BOL Series
2	防水执行器（P6B, 10M, 250HR）Waterproof actualor(IP68，10M，250HR)	BOL 系列 BOL Series
3	电位计（1K-10K） Potentioneter（1K-10K）	除BOL-03外 Except BOL-03
4	比例控制单元(输入，输出信号)4-20mA DC/1-5V/1-10V Proportional control unit(Input,output signal)4-20m A DC/5V/1-10V)	除BOL-03外 Except BOL-03
5	现场控制单元(就地控制 开/停/关选择开关，就地/远程切换） Field control unit(local control open/stop/close switch,local/remote control switch)	除BOL-03外 Except BOL-03
6	行程 Stroke120°，180°，270°	BOL系列 BOL Series
7	直流电机（24V DC） DC motor(24V DC）	除BOL—03外 Except BOL-03
8	电流位置传感器(输出4-20mA DC）Current position sensor(Output 4-20mA DC)	除BOL-03外 Except BOL-03
9	断信号复位 Self-reset when feed back failure	

BOL 系列电动执行器
BOL SERIES ELECTRIC ACTUATORS

◆ 外观尺寸 Appearance Size

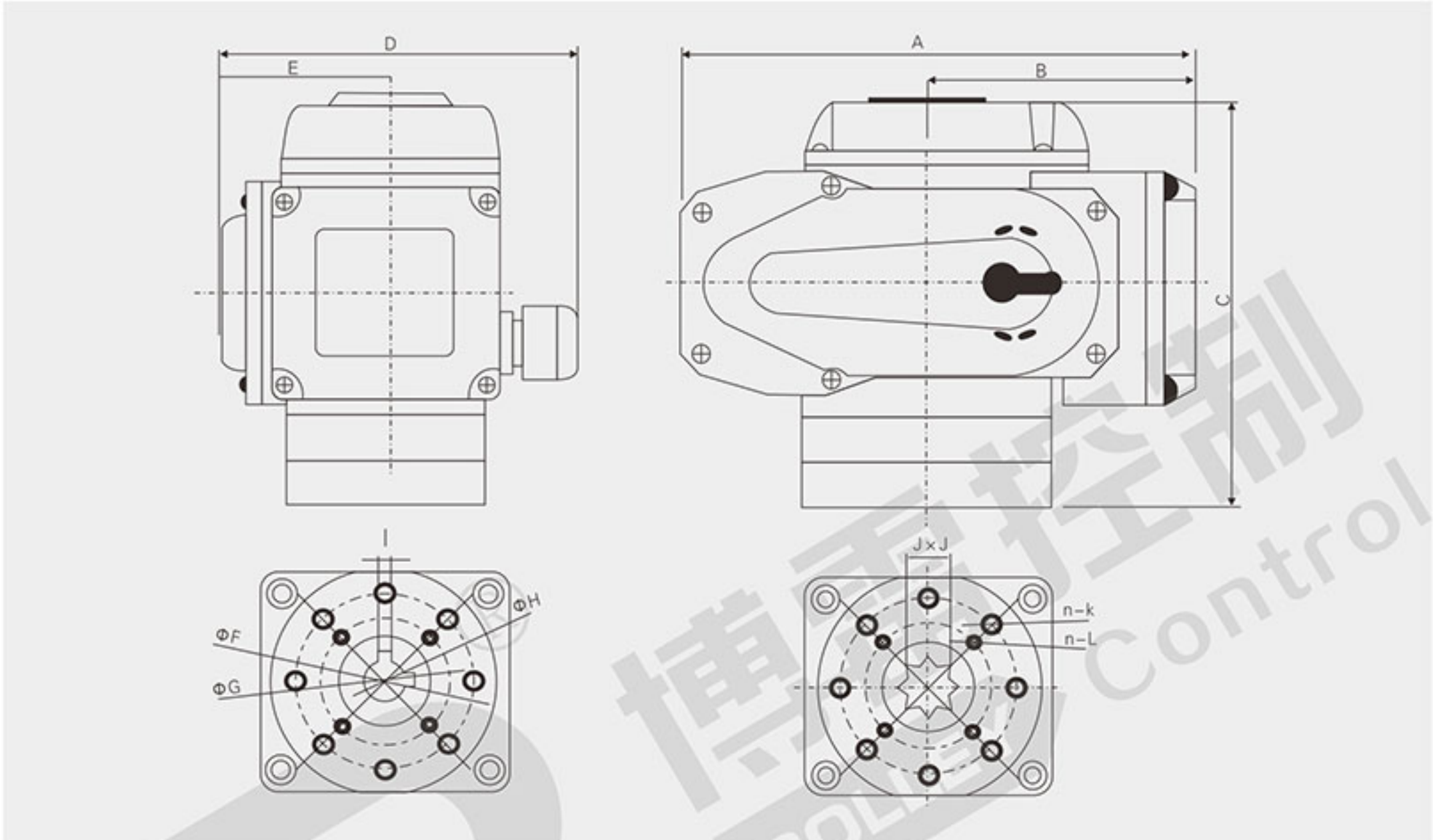

型号 Model	A	B	C	D	E	F	G	H	I	J×J	K	L
BOL-05	165	72	152	134	67	Φ50	Φ36	Φ12.8	3	11×11	4-M6	4-M6
BOL-10	204	98.5	159	140	75	Φ70	Φ50	Φ16	5	14×14	4-M8	4-M6
BOL-15	204	98.5	159	140	75	Φ70	Φ50	Φ19.1	5	17 ×17	4-M8	4-M6
BOL-25	257	119	193	178	90	Φ102	Φ70	Φ22.3	5	22×22	4-M10	4-M8
BOL-50	257	119	193	178	90	Φ102	Φ70	Φ28.8	5	22×22	4-M10	4-M8
BOL-100	280	153	160	172	90	Φ125	Φ102	Φ31.8	8	36×36	4-M12	4-M10
BOL-200	280	153	160	172	90	Φ140	Φ125	Φ33.4	10	36×36	4-M14	4-M12

开关型
Switch type

调节型
Modulating type

博雷控制
BOLLEY Control

博雷(天津)控制系统制造有限公司
BOLLEY(TIANJIN) CONTROL SYSTEM MANUFACTURING CO., LTD.

地址(Add)：天津市东丽区跃进路1199号

电话(Tel)： 022-27575088

传真(Fax)：022-87880319

Http：//www.bolley.cn

E-mail：cn@bolley.cn